THIS DRAWING IS THE PROPERTY OF PRIMARY FLUID SYSTEMS INC. FROM WHICH A WRITTEN CONSENT FOR APPROVAL SHALL BE REQUIRED PRIOR TO COPYING.

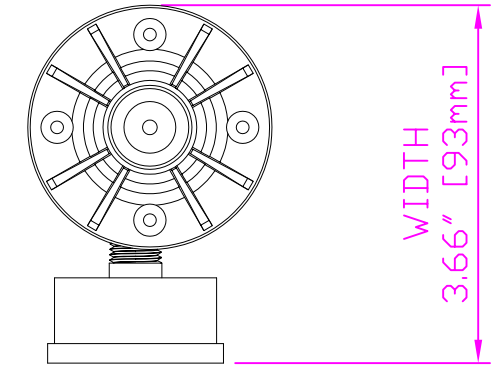

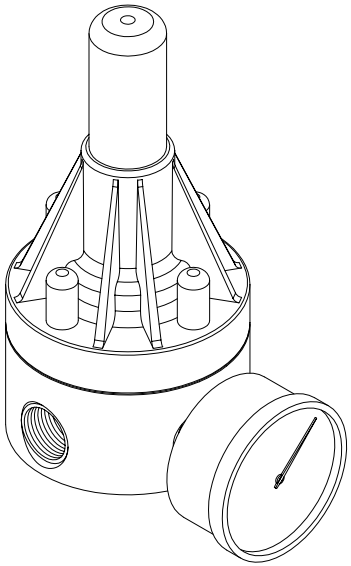

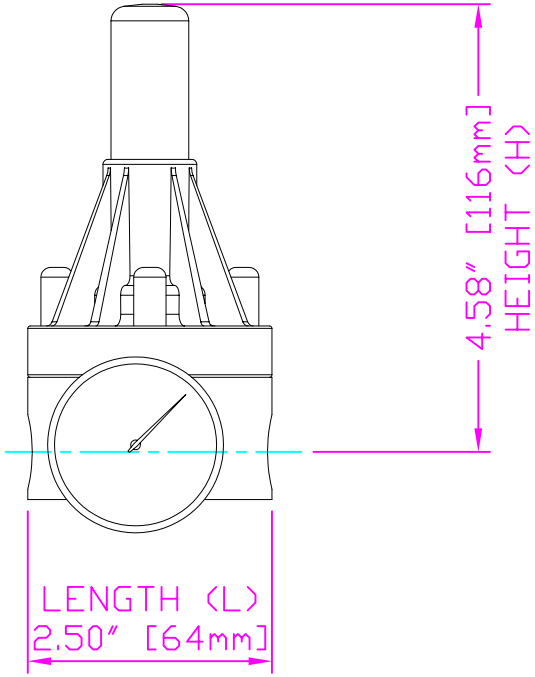

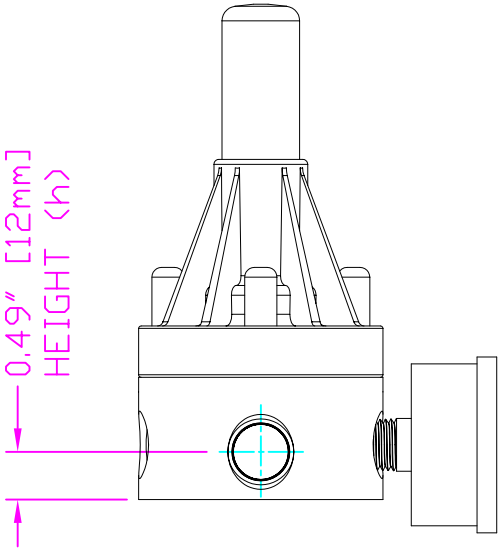

THIS DRAWING WITH DIMENSIONS APPLY TO FOLLOWING MODELS:

ECO-38A-ALL20-T-GAUGE
ECO-38A-HAST-T-GAUGE
ECO-38A-SS-T-GAUGE

ECO-38B-ALL20-T-GAUGE
ECO-38B-HAST-T-GAUGE
ECO-38B-SS-T-GAUGE

PRIMARY FLUID SYSTEMS INC.
1050 Cooke Blvd., Burlington, Ontario L7T 4A8

TITLE: ⅜" THREADED ECO VALVE WITH GAUGE

DWG TYPE: PLANAR VIEW 2-D

PROJECT: A-SERIES ECO	SHT: 1 OF 1	DRAWN BY: VICTOR W.
DATE ISSUED: 20-AUG-10	SCALE: 1:2	UNITS: INCHES
DWG NO.: ECO-38A-SS-T-GAUGE-2D		REV.#: 1
MATERIAL: METALLIC	DIMENSIONAL TOLERANCE X.XX = ± 0.25"	8.5 X 11 SHEET SIZE: A
APPROVED BY:	THIRD ANGLE PROJECTION	