THIS DRAWING IS THE PROPERTY OF PRIMARY FLUID SYSTEMS INC. FROM WHICH A WRITTEN CONSENT FOR APPROVAL SHALL BE REQUIRED PRIOR TO COPYING.

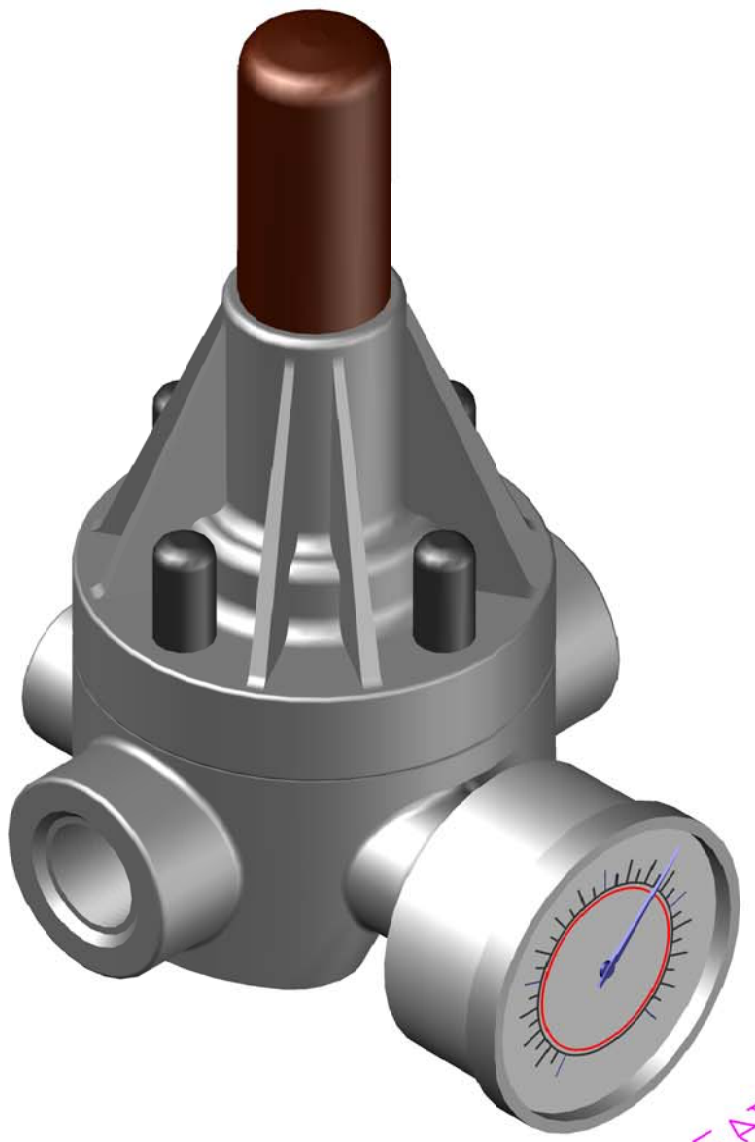

3/8" THREADED
POLY ECO VALVE
WITH GAUGE

THIS DRAWING APPICABLE TO
FOLLOWING MODELS:

ECO-38A-PVC-P-GAUGE
ECO-38A-CPVC-T-GAGUE
ECO-38A-PP-T-GAUGE
ECO-38A-PVDF-T-GAUGE

ECO-38B-PVC-P-GAUGE
ECO-38B-CPVC-T-GAUGE
ECO-38B-PP-T-GAUGE
ECO-38B-PVDF-T-GAUGE

PRIMARY FLUID SYSTEMS INC. 1050 Cooke Blvd., Burlington, Ontario L7T 4A8	PROJECT: A-SERIES ECO	SHT: 1 OF 1	DRAWN BY: VICTOR W.
	DATE ISSUED: 10-AUG-10	SCALE: 1:1	UNITS: INCHES
TITLE: 3/8" THREADED ECO VALVE WITH GAUGE	DWG NO.: ECO-38A-PVC-P-GAUGE-3D		REV.#: 0
	MATERIAL: POLY	DIMENSIONAL TOLERANCE: 0.XX = ± 0.25"	11 X 17 SHEET SIZE: B
DWG TYPE: PLANAR VIEW 3-D	APPROVED BY:	THIRD ANGLE PROJECTION	