THIS DRAWING IS THE PROPERTY OF PRIMARY FLUID SYSTEMS INC. FROM WHICH A WRITTEN CONSENT FOR APPROVAL SHALL BE REQUIRED PRIOR TO COPYING.

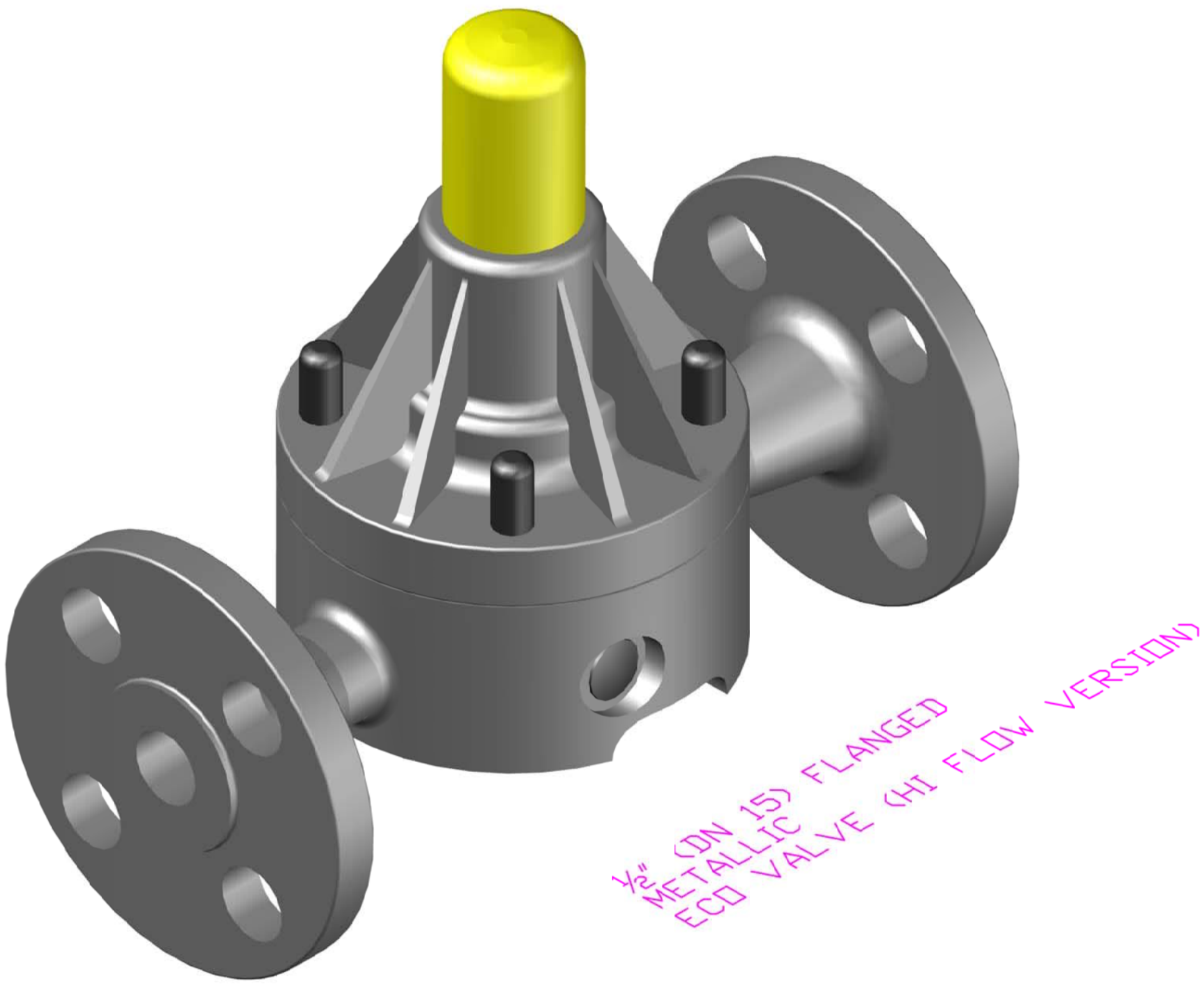

THIS DRAWING APPLICABLE TO FOLLOWING MODELS:

ECO-55E-ALL20-T
ECO-55E-HAST-T
ECO-55E-SS-T

ECO-55F-ALL20-T
ECO-55F-HAST-T
ECO-55F-SS-T

PRIMARY FLUID SYSTEMS INC.
1050 Cooke Blvd., Burlington, Ontario L7T 4A8

TITLE: ½" (DN 15) FLANGED ECO VALVE (HI FLOW VERSION)

DWG TYPE: ISOMETRIC VIEW 3-D

PROJECT: ECO B-SERIES	SHT: 1 OF 1	DRAWN BY: VICTOR W.
DATE ISSUED: 25-AUG-10	SCALE: 1:1	UNITS: INCHES
DWG NO.: ECO-55E-SS-T-3D		REV.#: 0
MATERIAL: METALLIC	DIMENSIONAL TOLERANCE: 0.XX = ± 0.25"	11 X 17 SHEET SIZE: B
APPROVED BY:	THIRD ANGLE PROJECTION	